Our goal is the sea of stars!

ZHEJIANG ZHEGUI ELECTRIC CO,. LTD.

Address: No.316 Weishiyi Road , Yueqing City,
Zhejiang Province, China
ProvinceTel: 0577-62657695/626577696
Email address:service@giantele.com
Website: www.giant-electric.com

Giantele®

ZN-85

High voltage vacuum circuit breaker



www.giant-electric.com

ZHEJIANG ZHEGUI ELECTRIC CO., LTD.

ZN85-40.5

High voltage vacuum circuit breaker

Model meaning

The circuit breaker is suitable for the three-phase AC 50Hz, 40.5kV system, for industrial and mining enterprises, power plants and substations as the division of load current, overload current, fault current, and suitable for frequent operation occasions.





ZHEJIANG ZHEGUI ELECTRIC CO., LTD.

Model meaning

ZN	85	-	40.5	/	□	-	□
Indoor vacuum	Design sequence number		Rated voltage (kV)		Rated current (A)		Rated short circuit breaking current (kA)

Environmental condition

- The upper limit of ambient temperature is +40℃, and the average value measured within 24 hours does not exceed 35℃; Lower limit -15℃.
- The altitude does not exceed 1000m.
- Relative humidity: the daily average does not exceed 95%; The monthly average value does not exceed 90%;
- Water vapor pressure: daily average does not exceed 2.2kPa, monthly average does not exceed 1.8kPa.
- The surrounding air is not significantly contaminated by dust, smoke, corrosive or combustible gases, vapors and salt spray.
- When used under the above normal environment and other conditions specified in GB/T11022-1999, the user can negotiate with the manufacturer to solve the problem.

Special service conditions

According to the provisions of the national standard GB/T11022-1999 "Common technical requirements for High voltage switchgear and control equipment standards", the circuit breaker should operate under normal conditions. If the working conditions used by the user are different from the normal conditions of use, such as: the installation site is more than 1000m above sea level, the surrounding air temperature exceeds the limit value specified in the normal conditions of use, or the high humidity is easy to produce condensation, should be negotiated with the manufacturer.nt and other conditions specified in GB/T11022-1999, the user can negotiate with the manufacturer to solve the problem.



Product outline and matching dimensions

As shown in Figure 1

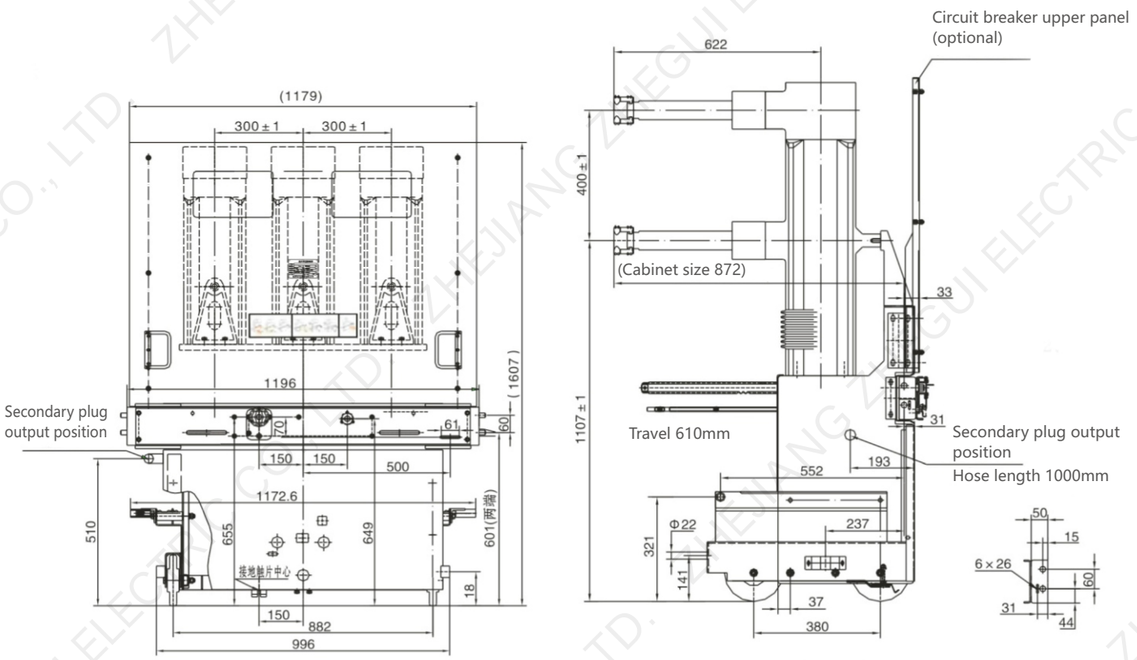

Figure 1 Circuit breaker outline

Specific data

1, with static contact diameter:
1250A-Φ49;
1600A-Φ55;
2000 A -Φ 79;
2500 A- Φ109
PT, fuse handcart Φ-35.

2, the output position of the secondary plug: the height of the left side of the frame is 510mm, the depth is 193mm; Hose length: frame side panel to plug about 1000mm

○ Technical parameter

The main technical parameters of circuit breakers are shown in Table 1.

Table 1

NO.	Parameter name	Unit	Numerical value
1	Rated voltage	kV	40.5
2	1 min power frequency withstand voltage	kV	95
3	Lightning impulse withstand voltage	kV	185
4	Rated frequency	Hz	50
5	Rated current	A	1250;1600;2000;2500
6	Rated short-time withstand current	kA	20;25;31.5
7	Rated peak withstand current	kA	50;63;80
8	Rated short circuit duration	S	4
9	Rated short-circuit breaking current	kA	20;25;31.5
10	Rated short-circuit closing current	kA	50;63;80
11	Rated operating sequence		0-0.3s- CO -180s- CO
12	Closing time	ms	50~100
13	Opening time	ms	35~60
14	Loop resistance (without contact arm)	μΩ	≤45 (rated current 2500A) ≤60 (rated current 1600A; 2000A) ≤80 (rated current 1250A; 630A)
15	Breaking time	ms	≤80
16	Rated short circuit breaking current breaking ti	Times	20
17	Rated operating voltage	V	-110/~110,-220/~220
18	Rated working current of switching coil	A	1.05/(-110V);0.96/(-220V)
19	Mechanical life	次	10000

The circuit breaker vacuum interrupter can adopt the latest design of the coil type longitudinal high magnetic field structure vacuum interrupter from the United States Cutler Hammer company, Siemens Company or domestic production.

○ Structure and working principle

Structure

The circuit breaker adopts the up and down arrangement structure, which effectively reduces the depth of the circuit breaker. The circuit breaker adopts a composite insulation structure, and the three-phase interrupter and the connected live body are isolated by three independent epoxy resin insulating enclosures. After the composite insulation structure is adopted, the circuit breaker meets the requirements of air clear distance and creep distance under normal operating conditions, and effectively reduces the volume of the circuit breaker. The main electric circuit vacuum interrupter and the dynamic and static conductive connection are installed in the insulation cylinder, so that the pole distance is 300mm. The main circuit electrical connections are all fixed connections, with high reliability. The insulation cylinder is mounted on the circuit breaker frame.

The operating mechanism adopts a specially designed spring operating mechanism, which is installed in the circuit breaker frame, and its structural characteristics are more suitable for the up and down layout of the circuit breaker, and become an integral part of the overall structure of the circuit breaker. The design of the mechanism is simple, and the output curve matches well with the requirements of the arc extinguishing chamber. Its performance is more suitable for the characteristics and requirements of 40.5kV vacuum circuit breaker.

The overall layout of the circuit breaker is reasonable, beautiful, simple, flexible operation, with reliable electrical performance, long service life, easy maintenance, and less maintenance of the mechanism, suitable for a variety of occasions and workplaces with harsh operating conditions.

○ Working principle

Electrical working principle

The main electrical circuit is shown in Figure 2: The vacuum interrupter is the core component of the vacuum circuit breaker breaking current. The vacuum interrupter used in this circuit breaker is a newly designed vacuum interrupter with the inner sealing structure of the main shield, and the diameter and length of the pipe are significantly reduced. A series of research tests show that the new vacuum interruptor has good breaking ability and insulation performance, and the breaking current is 31.5kA.

When the circuit breaker receives the opening instruction, the moving contact of the arc extinguishing chamber is separated from the static contact at a certain opening speed under the drive of the mechanism, and the cutting current of the vacuum arc extinguishing chamber completes the opening operation.

Mechanism energy storage principle

- Motor energy storage operation

The mechanism energy storage unit adopts a single-stage deceleration structure, and the motor inputs power from one end of the small sprocket shaft and drives the large sprocket through the roller chain. The big sprocket turns and drives the drive claw at the same time. The drive claw occluses with the drive block during the movement to realize the closing spring energy storage. When the spring energy storage is in place, the stroke switch is pushed to cut off the motor power supply. At the same time, the clutch push wheel lifts the drive claw out of the drive block. Thus, the energy storage mechanical system is not damaged under the action of inertia force.

- Manual energy storage operation

The manual energy storage operation handle (about 420mm long, accessories) is inserted into the jack of the energy storage rocker arm, and then the left and right swing (about 60 degrees), the use of one-way bearings, drive the energy storage shaft rotation to achieve the closing spring energy storage.

After the energy storage of the mechanism is completed, the circuit breaker can accept the closing instruction at any time to realize the closing operation.

Circuit breaker operation principle

- Mechanism combined and partial action principle

The joint operation of the mechanism is realized by the cam-connecting rod mechanism.

Closing operation

When the closing spring of the mechanism is finished storing energy, the closing spring is kept in the state of energy storage due to the action of the main child, the energy storage keeps the main child clasp in the direction of the release trend under the action of the CAM roller force. At this time, if the closing half shaft is rotated clockwise to the release position (about 20 degrees), the energy storage keeps the main child clasp will move rapidly in the clockwise direction. The energy storage holding state is lifted, the closing spring quickly releases energy, and drives the CAM to rotate. At the same time, the connecting rod mechanism moves to the closing position under the drive of the CAM, so as to complete the closing action of the mechanism. At this time, the travel switch is reset, the motor is energized and the closing spring is stored again, so that the mechanism is in the closing energy storage state.

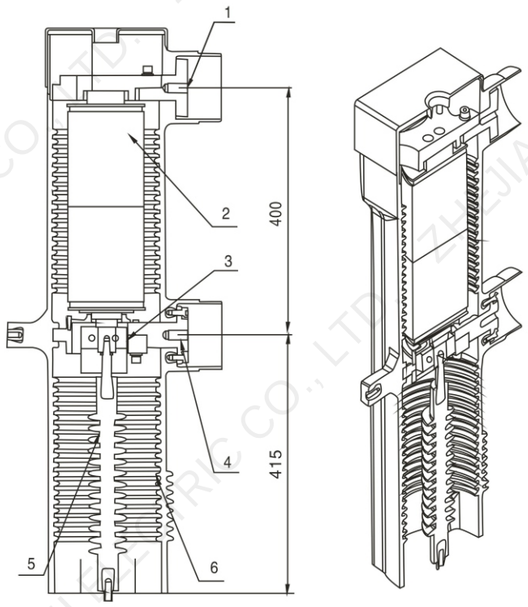

1. Attach the conductive block
2. Vacuum interrupter
3. Soft connection
4. Lower the conductive block
5. Operate the insulator
6. Insulation cylinder

Figure 2 Main electrical circuit diagram

Opening operation

The closing state of the mechanism is maintained by the gusset plate and half shaft of the connecting rod mechanism. At this time, if the opening half shaft is rotated counterclockwise to the tripping position (about 20 degrees), the gusset will move rapidly in the counterclockwise direction, and the balance of the connecting rod mechanism will be lifted. Under the action of the load force of the circuit breaker, it moves to the opening position, so as to complete the opening action of the mechanism.

- Circuit breaker operation principle

Circuit breaker closing operation principle

The circuit breaker structure diagram is shown in Figure 4.

When the closing spring of the mechanism is finished storing energy, the closing spring is kept in the state of energy storage due to the action of the main child, the energy storage keeps the main child clasp in the direction of the release trend under the action of the CAM roller force. At this time, if the closing half shaft is rotated clockwise to the release position (about 20 degrees), the energy storage keeps the main child clasp will move rapidly in the clockwise direction. The energy storage holding state is lifted, the closing spring quickly releases energy, and drives the CAM to rotate. At the same time, the connecting rod mechanism moves to the closing position under the drive of the CAM, so as to complete the closing action of the mechanism. At this time, the travel switch is reset, the motor is energized and the closing spring is stored again, so that the mechanism is in the closing energy storage state.

When the crank arm on the main shaft pushes the transmission insulator, the other end of both sides of the crank arm compresses the opening spring (1) to complete the energy storage; The arm of the intermediate phase presses the circuit breaker closing indicator, so that the indicator indicates the closing state. The circuit breaker closes.

The circuit breaker structure diagram is shown in Figure 4.

The circuit breaker is in the state of closed energy storage or closed without energy storage, when the opening instruction is received, the mechanism will release the closing state and quickly open the gate. Under the action of the opening force, the breaker breaks open, and the isolation chamber cuts off the current to form an open circuit. The crank arm, transmission insulator, main shaft, opening spring, closing and opening indicator plate are restored to the opening position. Circuit breaker opening operation complete.

Propulsion mechanism

Adopt lead screw, nut propulsion mechanism device, with overrunning clutch device. The circuit breaker can be easily moved in the switch cabinet, making the circuit breaker travel range accurate and reliable. See Figure 3.

Circuit breaker stroke: the standard stroke of the circuit breaker is 610±2mm, when there is a special need for the stroke, please indicate when ordering. The standard stroke of the circuit breaker 610mm can be adjusted appropriately, the adjustment range is ± 5mm, and the debugging method is shown in Figure 5.

Propulsion: The circuit breaker is in the test position and in the switching state. Open the small door (the left and right handles of the rolling mechanism and the interlocking operation handle of the ground switch need to be in position 1 of Figure 3), insert the rolling handle, and make the handle turn clockwise. When the handle is idling and accompanied by a "snap" sound, it means that the clutch action is exceeded, and the circuit breaker no longer moves to the working position. Remove the handle and close the small door, and the circuit breaker can be separated and closed.

Exit: The circuit breaker is in the working position and in the opening state, open the small door, insert the swing in handle, make the handle turn anticlockwise, when the handle is idling and accompanied by "click" sound, it means that the clutch action is exceeded, and the circuit breaker will not move and reach the test position; Remove the handle and close the small door to split and close the circuit breaker.

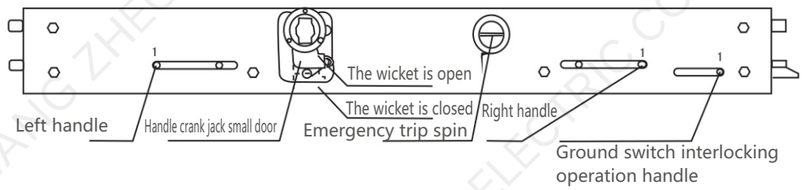

Figure 3. Propulsion mechanism

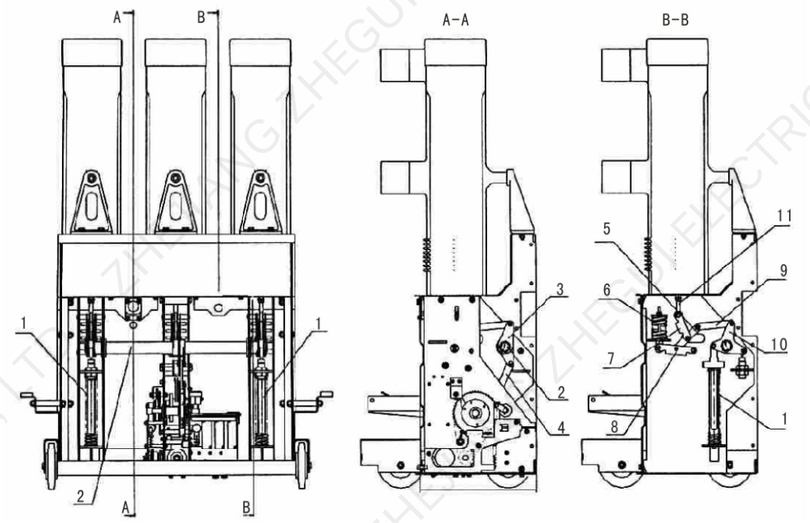

1. Opening spring
2. Large axis
3. Middle phase arm crank
4. Drive rod
5. Drive plate 2
6. Contact spring
7. Drive plate 3
8. Drive plate 4
9. Drive plate 1
10. Side arm swing
11. Rod end joint bearing

Figure 4 Schematic diagram of circuit breaker structure

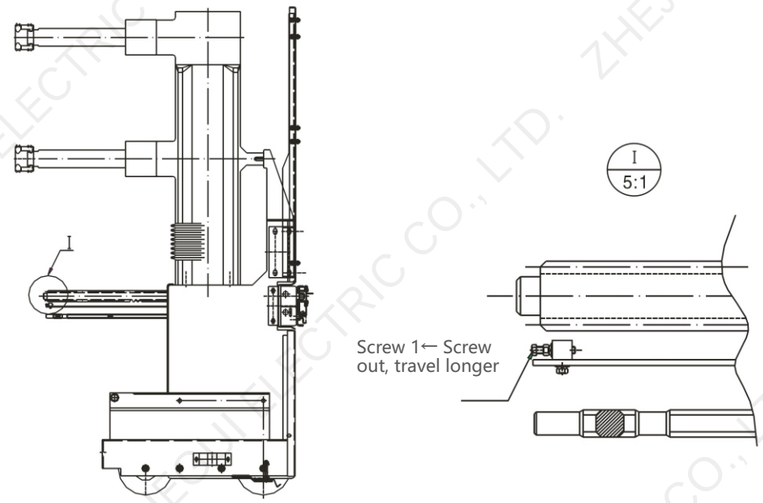

Figure 5 Schematic diagram of circuit breaker stroke adjustment

The secondary schematic diagram and wiring diagram of the circuit breaker are shown in the attached drawing.

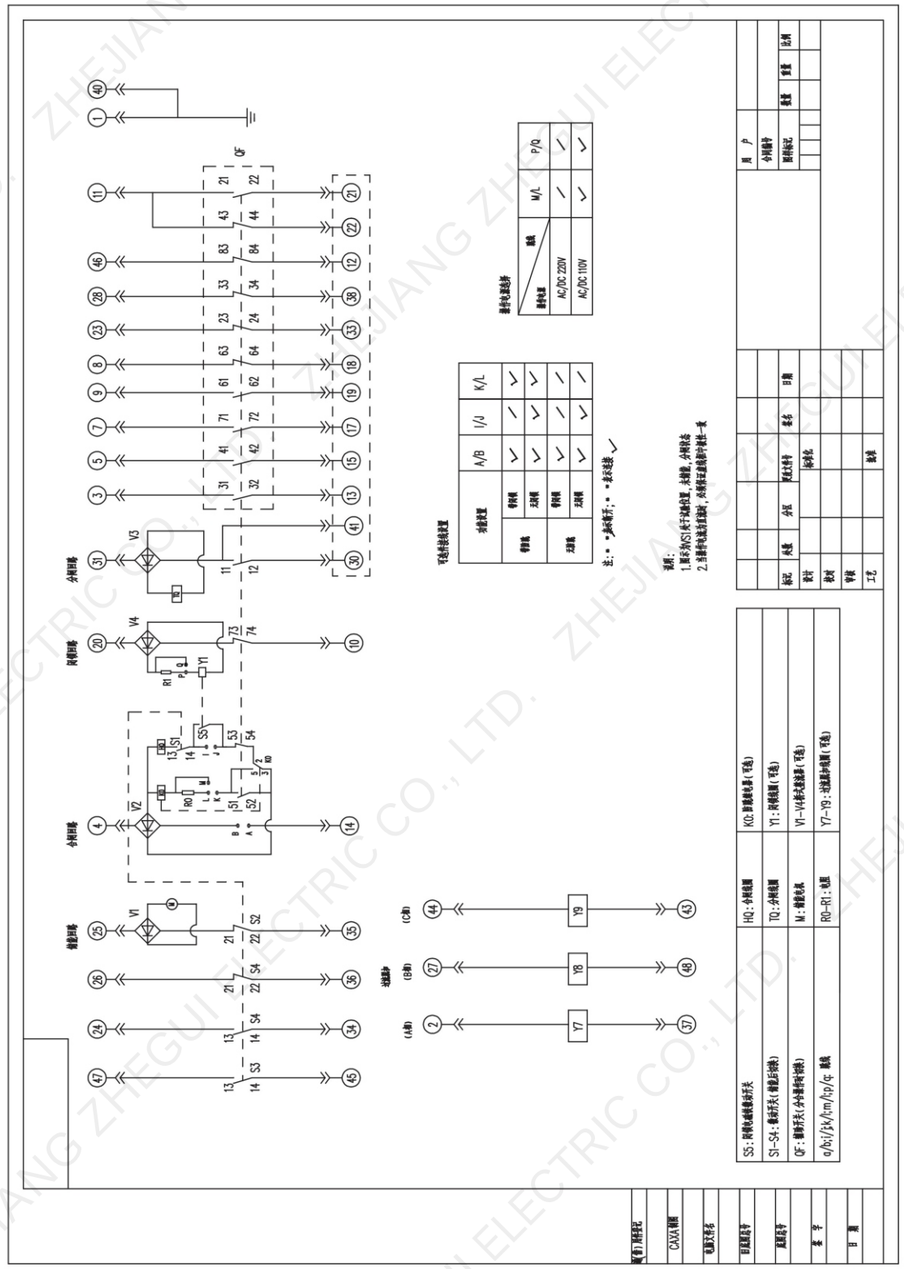

Figure 1 ZN85-40.5 secondary wiring diagram

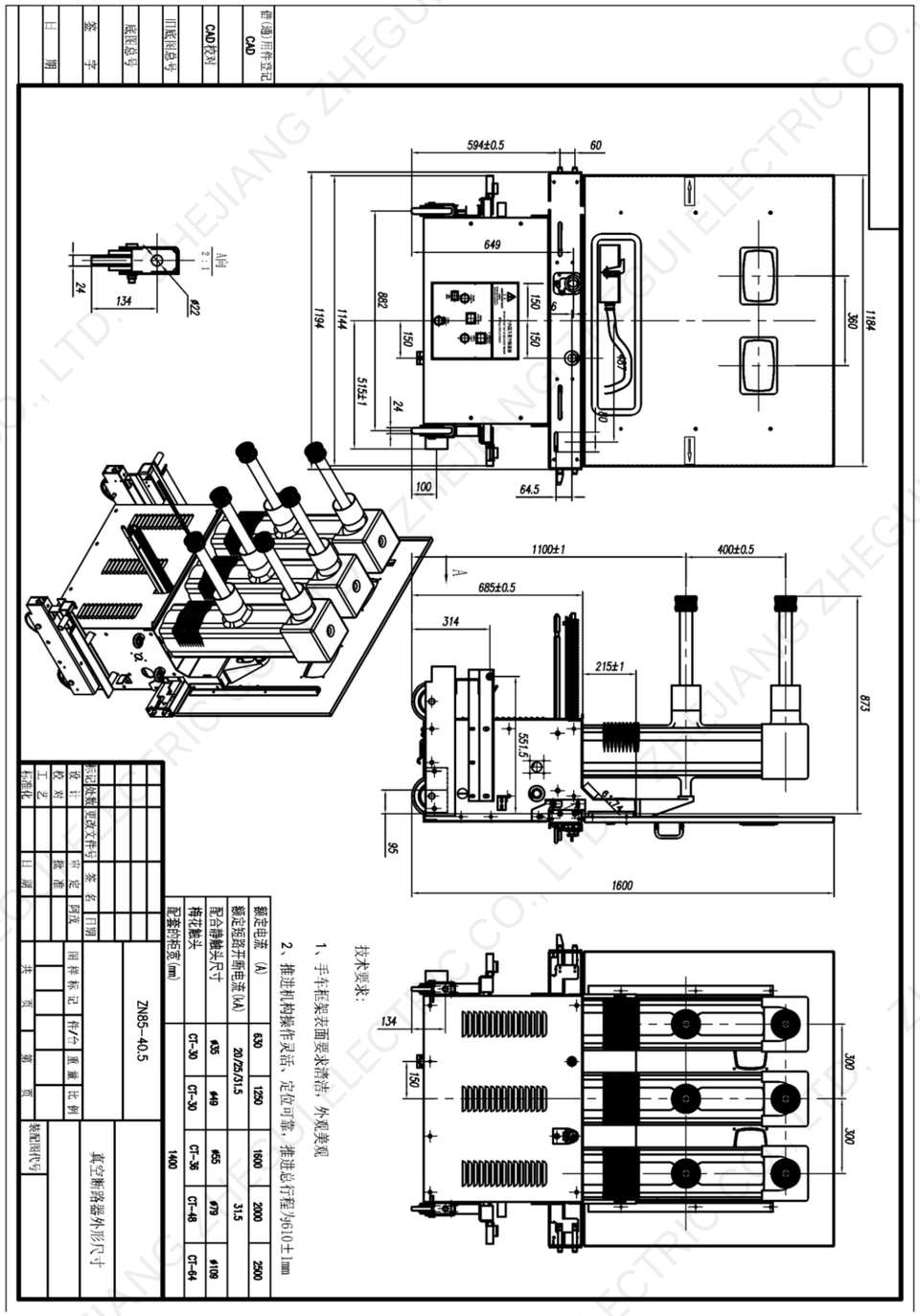

○ Installation and commissioning

Pre-installation inspection

After the circuit breakers are unpacked, check whether the components are complete, whether the circuit breakers are damp or damaged, and whether they work properly according to the packing list. Clean the surface after inspection. Check the vacuum degree of the vacuum isolation chamber with the power frequency voltage withstand method (the circuit breaker is opened, and the processing frequency is 95kV/1min at the fracture). After all the checks are passed, you can start the installation.

Debug

Products that are unpacked and checked in good condition generally do not need to be re-debugged. Only when the circuit breaker is found to not meet its technical requirements or replace important parts, the product needs to be debugged.

First, adjust the height of the joint bearing and the buffer at the lower end of the dynamic conductive rod of the vacuum isolation chamber, so that the opening distance of the vacuum isolation chamber contact is 18±1mm; Adjust the nut on the contact spring so that the contact stroke is 5±1 mm; Recheck whether the connection and oil buffer of the main shaft are normal. Finally, adjust the mechanism to make the mechanism operate normally, no matter manual, electric control, energy storage, closing, opening and other actions should not appear stuck phenomenon

After the circuit breaker is fully adjusted, it should meet the parameters listed in Table 2.

Table 2

N0.	Parameter name	Unit	Numerical value
1	Contact opening distance	mm	18±1
2	Overtravel	mm	5 ± 1
3	Allowable wear thickness of contact	mm	3
4	Average closing speed	m/s	0.8 ± 0.2
5	Average opening speed	m/s	1.8 ± 0.2
6	Contact closing bounce time	ms	≤ 5
7	The three phase contact is not closed at the same time	ms	≤ 2
8	The three phase contact has different opening time	ms	≤ 2

○ Use and troubleshooting

Circuit breaker rated operation sequence:
O-0.3s-CO-180s-CO
The opening and closing operation of the circuit breaker allows two operation modes:
electric operation mode and manual operation mode.

Electric operation mode

After the secondary plug of the circuit breaker is connected to the external control loop, remote control can be carried out on the opening and closing of the circuit breaker through the closing solenoid.

Manual operation mode

After the energy storage operation handle is inserted into the jack of the energy storage rocker arm to manually store energy, press the closing button on the panel to realize the closing operation, and then press the opening button to open the gate.

Fault handling
Common faults are as follows

The circuit breaker rejects because of the following possible causes:

The auxiliary switch cuts off the closing coil prematurely, and the core of the closing coil fails to push the closing shaft, resulting in rejection or improper closing; The pusher plate acting on the auxiliary switch of the mechanism should be adjusted to make the contact of the auxiliary switch reliable and punctual.

The shaft of the mechanism fails to support the roller on the CAM, and the mechanism fails to close and then the brake is opened; Should check whether the Zhi child is stuck or whether the Zhi child, the roller is damaged.

Circuit breaker rejection: the possible reason is that the opening half shaft is not in place; The rotation Angle of the opening half shaft should be adjusted so that it can fully rotate to the opening position under the push of the opening electromagnet.

When there is an unexplained fault or the fault cannot be handled, please contact the manufacturer for maintenance.

○ Maintenance

Circuit breakers in operation should be checked regularly, including:

- Check the vacuum degree of vacuum isolation chamber;
- Check whether the contact stroke and contact opening distance meet the requirements;
- Check whether fasteners are loose;
- Check whether the circuit breaker is dry and clean.
- Check the ablation of auxiliary switch contacts.

When the circuit breaker is found to be damp, all insulation parts should be checked in time. Dry the damp parts in the oven at 70-80℃ for 48 hours and then reassemble and debug them until they meet the parameters in Table 2.

All parts of the mechanism shall be checked every 2000 times of operation, and loose and poor lubrication shall be found and corrected in time.

If the short-circuit fault current of the isolation chamber is broken 20 times, the vacuum degree and contact burning condition of the isolation chamber should be checked. If it does not meet the requirements, replace the isolation chamber.

During use and maintenance, do not use hard objects (such as tools) to impact the vacuum isolation outdoor shell.

○ Transportation and storage

Transport

When the circuit breaker is transported, it must be put into a closed packing box to be fixed, and the loading and unloading packing boxes can only be taken as follows

Tool
1. Crane 2. Forklift 3. Driving

Attention:
1. Avoid impact and other destructive mechanical forces

2. When lifting the circuit breaker, the lifting device should not be hooked on the circuit breaker body or operating mechanism, but should be hooked in the lifting hole marked with the lifting mark of the circuit breaker (see Figure 6). To ensure that the circuit breaker is not impacted, to avoid other damaging mechanical stresses that occur during lifting.

3. Due to the high center of gravity of the circuit breaker, please be careful not to dump the circuit breaker when transporting and moving it into and out of the switch cabinet.

Store

If the vacuum circuit breaker must be stored before use, it can only be stored in a dry, dust-free Egypt and well-ventilated place. At the same time, the circuit breaker must be in the opening position, and the spring mechanism should be in a state of no energy storage.

When the circuit breaker is not used for a long time, the conductive surface should be coated with industrial petroleum jelly.

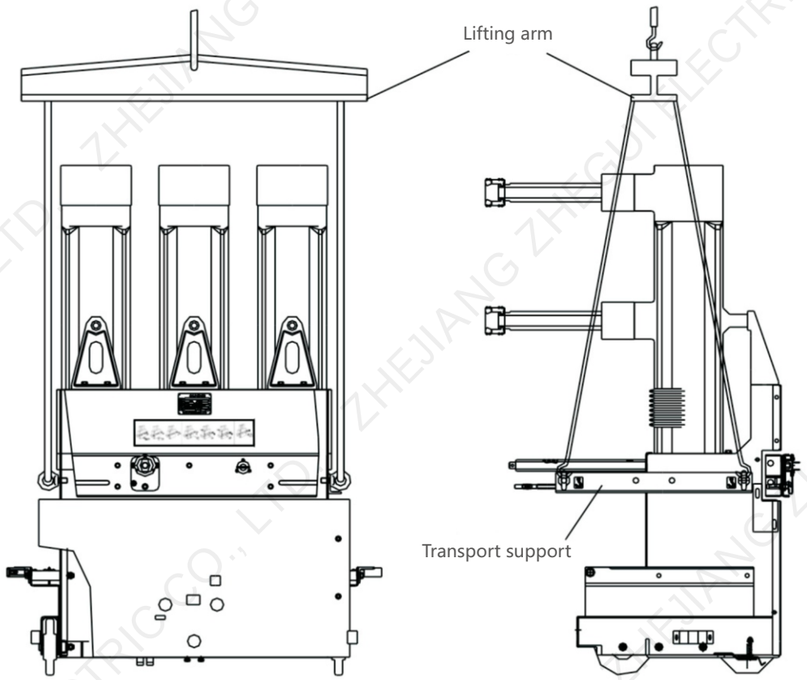

Figure 6 Hoisting diagram

When hoisting, use a lifting cross arm and a transport support to move the circuit breaker. Pay attention to the center of gravity of the circuit breaker to avoid tipping. After transportation, remove the transport support.

○ Random file

Product certificate.

Installation and operation instructions.

Packing list.

○ Order instructions

The order should indicate:

a. Purchased product model, name, quantity.

b. Operating voltage.

c. Spare parts name and quantity.

d. When the hoisting method is used, it must be indicated when ordering.

Product descriptions and legends are for reference only and may change over time. Please contact us without prior notice.